www.reelschematic.com

okuma
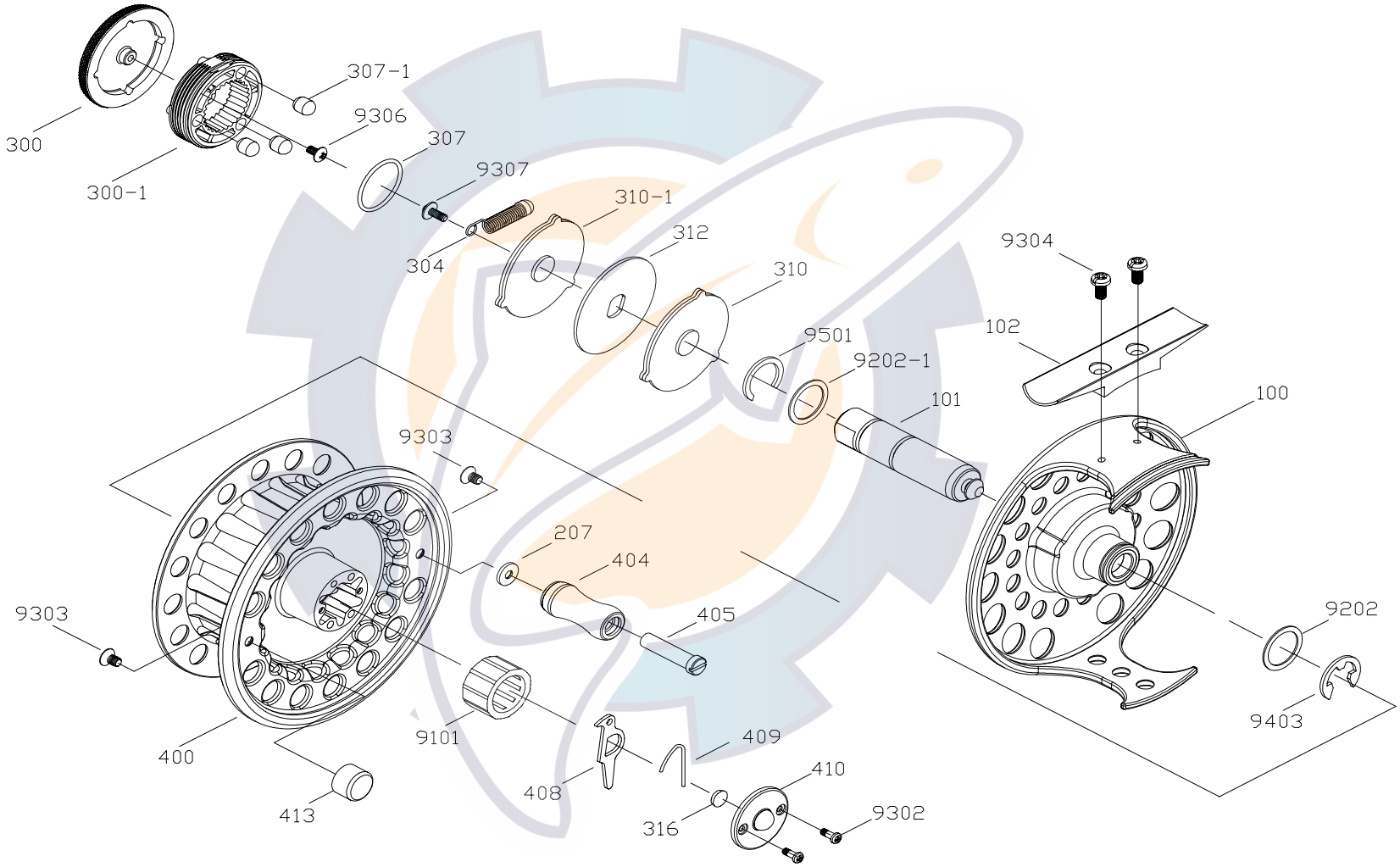
Fly